Fuel Cell Bipolar Plate

Introduction

This study presents a model that couples the thermal and structural analysis in a bipolar plate in a proton exchange membrane fuel cell (PEMFC). The fuel cell stack consists of unit cell of anode, membrane, and cathode connected in series through bipolar plates. The bipolar plates also serve as gas distributors for hydrogen and air that is fed to the anode and cathode compartments, respectively. Figure 1 below shows a schematic drawing of a fuel cell stack. The unit cell and the surrounding bipolar plates are shown in detail in the upper right corner of the figure.

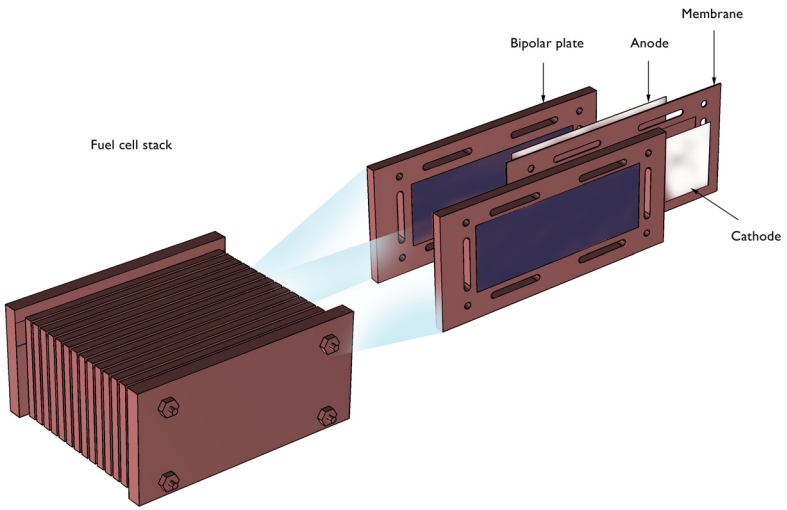

Figure 1: Schematic drawing of the fuel cell stack. The unit cell consists of an anode, membrane electrolyte, and a cathode. The unit cell is supported and supplied with reactants through the bipolar plates. The bipolar plates also serve as current collectors and feeders.

The PEMFC is one of the strongest alternatives for automotive applications where it has the potential of delivering power to a vehicle with a higher efficiency, from oil to propulsion, than the internal combustion engine.

The fuel cell operates at temperatures just below 100 °C, which means that it has to be heated at start-up. The heating process induces thermal stresses in the bipolar plates. The analysis in this model reveals the magnitude and nature of these stresses.

©2012 COMSOL

Model Definition

Figure 2 below shows the detailed model geometry. The plate consists of gas slits that form the gas channels in the cell, holes for the tie rods that keep the stack together, and the heating elements, which are positioned in the middle of the gas feeding channel for the electrodes. Due to symmetry, it is possible to reduce the model geometry to 1/8 of the actual size of the cell.

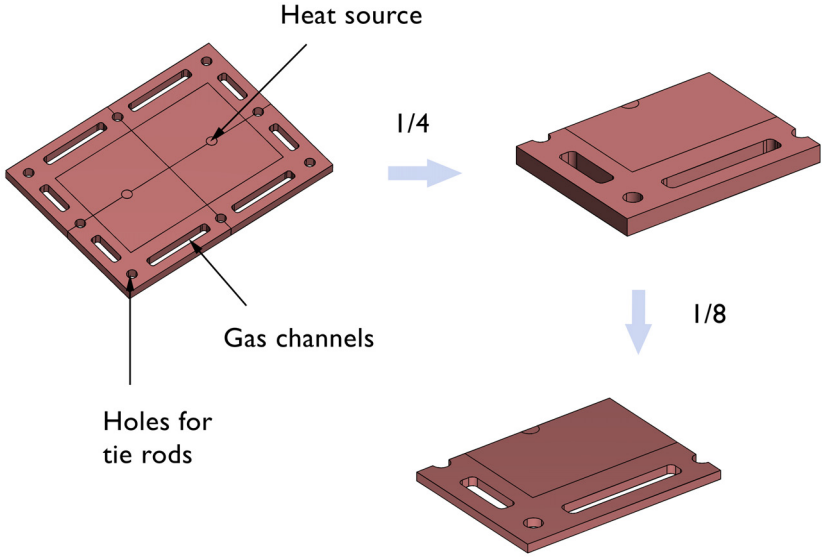

Figure 2: The modeled geometry.

The study consists of a thermal-structural analysis. In the following specification of the problem a number of constants are used; their values are listed in the following table. The constant Q_1 represents a power of 200 W distributed over the hole through the 25 bipolar plates in the fuel cell stack.

CONSTANT	VALUE	DESCRIPTION
Q_1	200/25/(π0.005^2·0.01) W/m^3	Volume power in one heating element
P_1	9.82·10^5 N/m^2	Pressure on the active part
P_2	7.85·10^6 N/m^2	Pressure on the manifold
h_1	5 W/(m^2·K)	Heat transfer coefficient to the surroundings
h_2	50W/(m^2·K)	Heat transfer coefficient in the gas channels

©2012 COMSOL

THERMAL ANALYSIS

The general equation is the steady-state heat equation according to:

$$\nabla \cdot (-k\nabla T) + Q = 0 \qquad (1)$$

where k denotes the thermal conductivity of the different materials, T the temperature, and Q a heat source or heat sink.

The modeled domain consists of three different domains. The first domain corresponds to the active part of the cell, where the electric energy is produced and the current is conducted. The production and conduction of current involve some losses. It is assumed in this model that the cell is heated prior to operation. This means that the model does not account for the heat sources due to the production and conduction of current; see Figure 3.

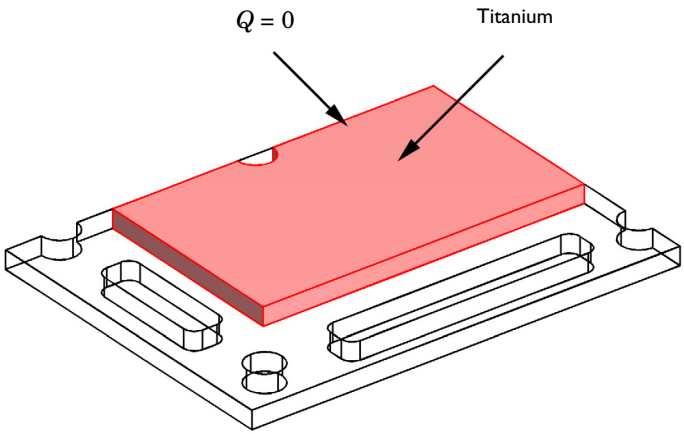

Figure 3: The active part of the cell bipolar plate is made of titanium.

The second domain corresponds to the heating element in the bipolar plate, which is made of aluminum. The power from this element is assumed to be uniformly distributed in the small cylindrical domain; see Figure 4.

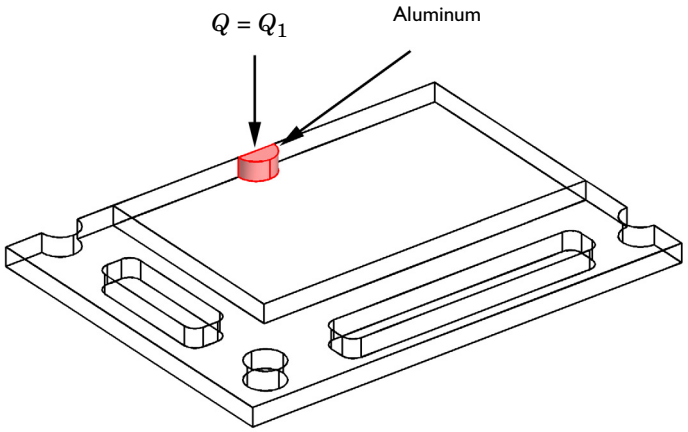

Figure 4: The heating element in the bipolar plate is made of aluminum.

The last domain forms the manifold in the cell. In this domain, only heat conduction is present. The construction material is titanium.

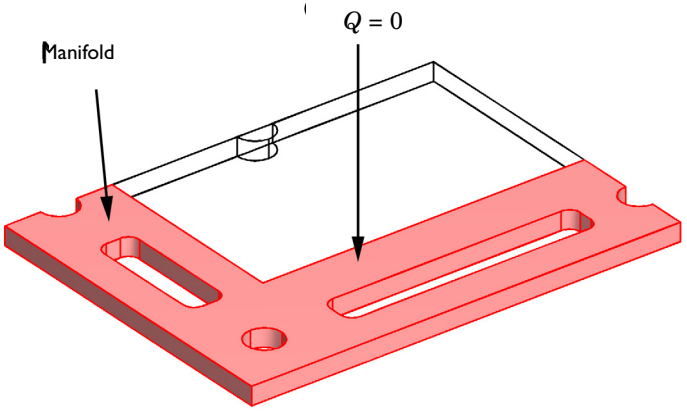

Figure 5: The domain that forms the manifold of the cell.

©2012 COMSOL

The thermal conductivity of the materials and the magnitude of the heat source form the input data needed in the model. You can find the data in the COMSOL Multiphysics file for this model.

The boundary conditions for the heat transfer analysis are symmetry conditions and convective conditions. The symmetry condition states that the flux is zero perpendicular to the boundary.:

$$(-k\nabla T)\cdot \mathbf{n} = 0. \tag{2}$$

The convective conditions set the heat flux proportional to the temperature difference between the fluid outside and the temperature at the boundary. The heat transfer coefficient is the proportionality constant:

$$(-k\nabla T)\cdot \mathbf{n} = h(T - T_{\text{fluid}}). \tag{3}$$

In this equation, h denotes the heat transfer coefficient.

Figure 6 below shows the insulation boundaries.

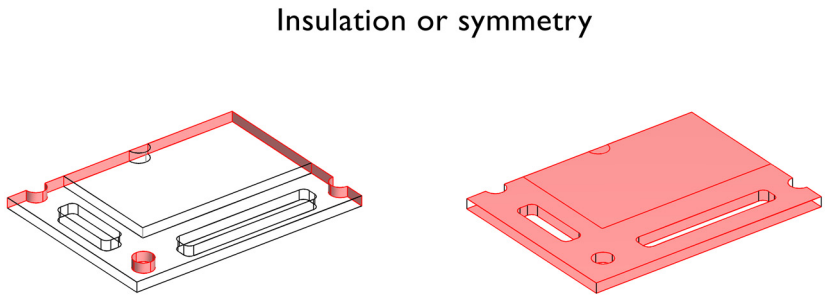

Figure 6: Insulation boundaries.

Figure 7 shows the convective boundaries. The heat transfer coefficient is different for the different groups of boundaries in the figure.

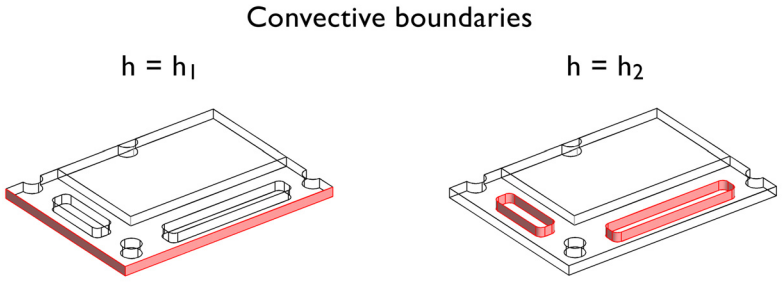

Figure 7: The convective boundaries.

STRUCTURAL ANALYSIS

The material properties for titanium and aluminum are obtained from COMSOL Multiphysics' materials database. The only volume loads present in the domain are those generated by thermal expansion. The thermal loads are proportional to the temperature difference between the reference state and the actual temperature.

The loads and constraints on the boundaries are shown in Figure 8 below. There are no displacements in the direction perpendicular to the symmetry boundaries.

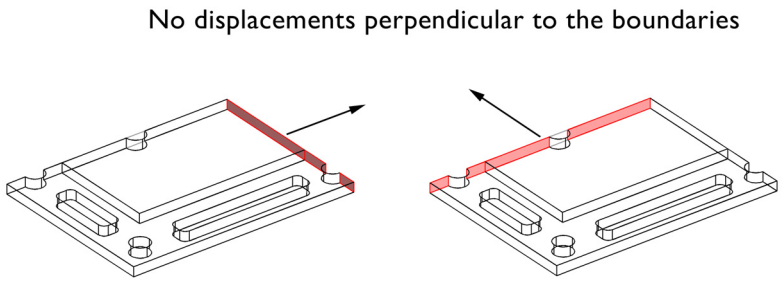

Figure 8: The symmetry boundaries.

©2012 COMSOL

The base surface of the plate is also a symmetry boundary, which implies that there are no displacements in the *z* direction at the position of the boundary.

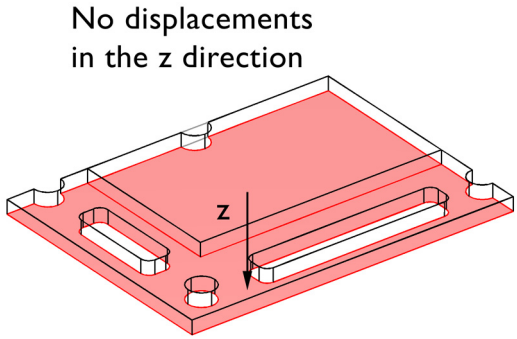

Figure 9: No displacement perpendicular to the symmetry plane.

In addition, the load applied by the tie rods on the stack is applied in the manifold and the active part at the bipolar plate. The pressure is different in these two domains.

The loads and constraints on all other boundaries are assumed to be negligible. In this context, the only questionable assumption is the possible loads and constraints imposed by the tie rods on the holes in the bipolar plate. In a more detailed analysis, it would be possible to couple a model for the tie rods with a detailed model of the bipolar plate.

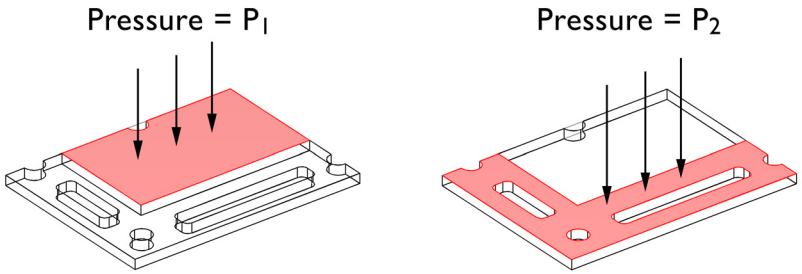

Figure 10: Pressure applied externally.

Results

Figure 11 shows the temperature field at steady state. The slits for the gas present the largest sinks of heat at the boundaries. The temperature decreases almost radially with the distance from the heating element.

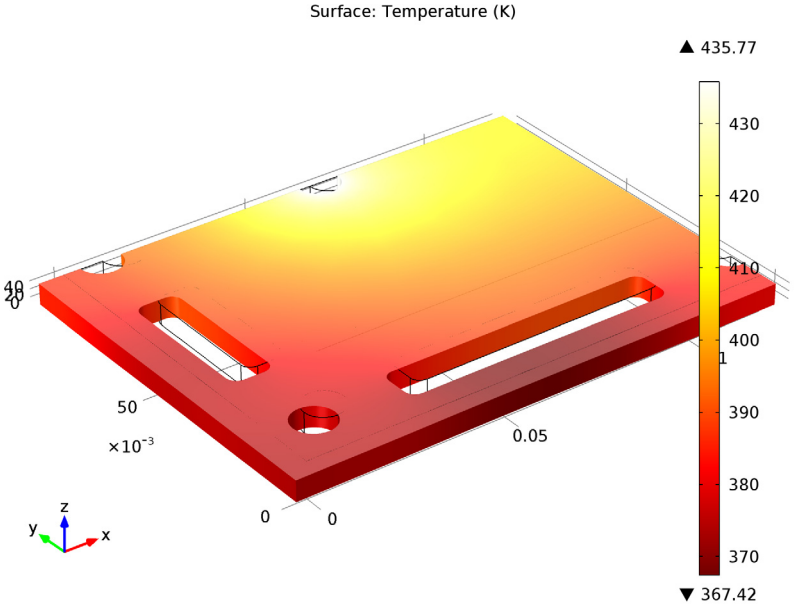

Figure 11: Temperature distribution in the plate.

The displacements and stresses generated due to the external pressure and the temperature gradients are shown in Figure 12.

©2012 COMSOL

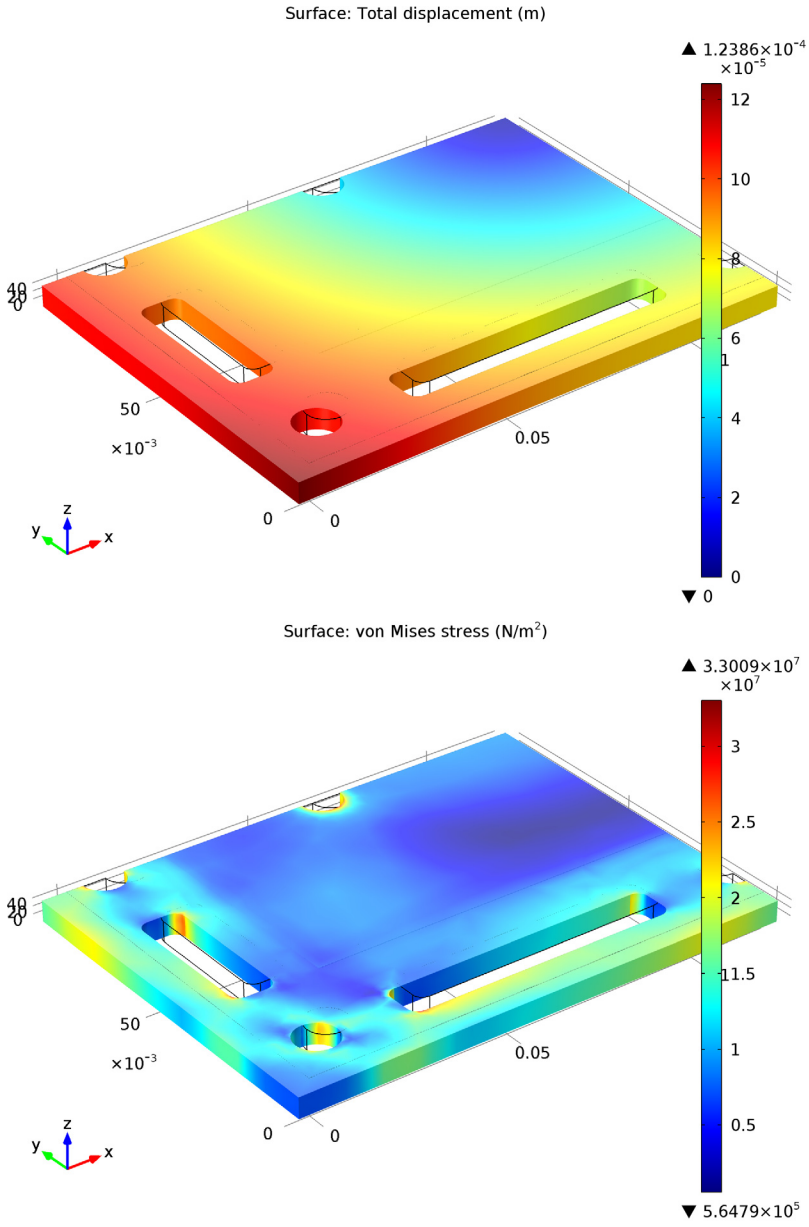

Figure 12: Displacements (top) and von Mises stresses (bottom) due to temperature and external loads.

Figure 12 shows that the thermal loads generate stresses that are one order of magnitude larger than those generated by the external pressure loads (which you can compute by turning off the thermal expansion). The loads are far from the critical values, but the displacements can be even more important. The displacements must be small enough to grant that the membrane can fulfill its function in separating hydrogen and oxygen in the anode and cathode compartments, respectively.

Model Library path: `Structural_Mechanics_Module/Thermal-Structure_Interaction/bipolar_plate`

Modeling Instructions

MODEL WIZARD

1 Go to the **Model Wizard** window.

2 Click **Next**.

3 In the **Add physics** tree, select **Structural Mechanics>Thermal Stress (ts)**.

4 Click **Next**.

5 Find the **Studies** subsection. In the tree, select **Preset Studies>Stationary**.

6 Click **Finish**.

GLOBAL DEFINITIONS

Parameters

1 In the **Model Builder** window, right-click **Global Definitions** and choose **Parameters**.

2 In the **Parameters** settings window, locate the **Parameters** section.

3 In the table, enter the following settings:

NAME	EXPRESSION	DESCRIPTION
P1	0.982[MPa]	Pressure on the active part
P2	7.856[MPa]	Pressure on the manifold

GEOMETRY 1

In the **Model Builder** window, under **Model 1** right-click **Geometry 1** and choose **Work Plane**.

 ©2012 COMSOL

Rectangle 1

1 In the **Model Builder** window, under **Model 1>Geometry 1>Work Plane 1** right-click **Plane Geometry** and choose **Rectangle**.

2 In the **Rectangle** settings window, locate the **Size** section.

3 In the **Width** edit field, type `0.12`.

4 In the **Height** edit field, type `0.09`.

5 Click the **Build Selected** button.

6 Click the **Zoom Extents** button on the Graphics toolbar.

Rectangle 2

1 In the **Model Builder** window, under **Model 1>Geometry 1>Work Plane 1** right-click **Plane Geometry** and choose **Rectangle**.

2 In the **Rectangle** settings window, locate the **Size** section.

3 In the **Width** edit field, type `0.09`.

4 In the **Height** edit field, type `0.055`.

5 Locate the **Position** section. In the **xw** edit field, type `0.3`.

6 In the **yw** edit field, type `0.035`.

7 In the **xw** edit field, type `0.03`.

8 Click the **Build Selected** button.

Rectangle 3

1 In the **Model Builder** window, under **Model 1>Geometry 1>Work Plane 1** right-click **Plane Geometry** and choose **Rectangle**.

2 In the **Rectangle** settings window, locate the **Size** section.

3 In the **Width** edit field, type `0.01`.

4 In the **Height** edit field, type `0.035`.

5 Locate the **Position** section. In the **xw** edit field, type `0.01`.

6 In the **yw** edit field, type `0.035`.

7 Click the **Build Selected** button.

Rectangle 4

1 In the **Model Builder** window, under **Model 1>Geometry 1>Work Plane 1** right-click **Plane Geometry** and choose **Rectangle**.

2 In the **Rectangle** settings window, locate the **Size** section.

3 In the **Width** edit field, type `0.065`.

©2012 COMSOL

4 In the **Height** edit field, type `0.01`.

5 Locate the **Position** section. In the **xw** edit field, type `0.035`.

6 In the **yw** edit field, type `0.01`.

7 Click the **Build Selected** button.

Circle 1

1 In the **Model Builder** window, under **Model 1>Geometry 1>Work Plane 1** right-click **Plane Geometry** and choose **Circle**.

2 In the **Circle** settings window, locate the **Size and Shape** section.

3 In the **Radius** edit field, type `0.005`.

4 Locate the **Position** section. In the **xw** edit field, type `0.015`.

5 In the **yw** edit field, type `0.015`.

6 Click the **Build Selected** button.

Copy 1

1 In the **Model Builder** window, under **Model 1>Geometry 1>Work Plane 1** right-click **Plane Geometry** and choose **Transforms>Copy**.

2 Select the object **c1** only.

3 In the **Copy** settings window, locate the **Displacement** section.

4 In the **yw** edit field, type `0.075`.

5 Click the **Build Selected** button.

Copy 2

1 In the **Model Builder** window, under **Model 1>Geometry 1>Work Plane 1** right-click **Plane Geometry** and choose **Transforms>Copy**.

2 Select the object **c1** only.

3 In the **Copy** settings window, locate the **Displacement** section.

4 In the **xw** edit field, type `0.105`.

5 Click the **Build Selected** button.

Fillet 1

1 In the **Model Builder** window, under **Model 1>Geometry 1>Work Plane 1** right-click **Plane Geometry** and choose **Fillet**.

2 On the object **r3**, select Points 1–4 only.

3 On the object **r4**, select Points 1–4 only.

4 In the **Fillet** settings window, locate the **Radius** section.

 ©2012 COMSOL

5 In the **Radius** edit field, type `2.5e-3`.

6 Click the **Build Selected** button.

Difference 1

1 In the **Model Builder** window, under **Model 1>Geometry 1>Work Plane 1** right-click **Plane Geometry** and choose **Boolean Operations>Difference**.

2 In the **Difference** settings window, locate the **Difference** section.

3 Under **Objects to add**, click **Activate Selection**.

4 Select the object **r1** only.

5 Under **Objects to subtract**, click **Activate Selection**.

6 Select the objects **c1**, **copy1**, **copy2**, **fil1(1)**, and **fil1(2)** only.

7 Click the **Build Selected** button.

Circle 2

1 In the **Model Builder** window, under **Model 1>Geometry 1>Work Plane 1** right-click **Plane Geometry** and choose **Circle**.

2 In the **Circle** settings window, locate the **Size and Shape** section.

3 In the **Radius** edit field, type `5e-3`.

4 Locate the **Position** section. In the **xw** edit field, type `0.07`.

5 In the **yw** edit field, type `0.09`.

6 Click the **Build Selected** button.

Rectangle 5

1 In the **Model Builder** window, under **Model 1>Geometry 1>Work Plane 1** right-click **Plane Geometry** and choose **Rectangle**.

2 In the **Rectangle** settings window, locate the **Position** section.

3 In the **xw** edit field, type `0.065`.

4 In the **yw** edit field, type `0.09`.

5 Locate the **Size** section. In the **Width** edit field, type `0.01`.

6 In the **Height** edit field, type `0.005`.

7 Click the **Build Selected** button.

Difference 2

1 In the **Model Builder** window, under **Model 1>Geometry 1>Work Plane 1** right-click **Plane Geometry** and choose **Boolean Operations>Difference**.

2 In the **Difference** settings window, locate the **Difference** section.

3 Under **Objects to add**, click **Activate Selection**.

4 Select the object **c2** only.

5 Under **Objects to subtract**, click **Activate Selection**.

6 Select the object **r5** only.

7 Click the **Build Selected** button.

8 Click the **Zoom Extents** button on the Graphics toolbar.

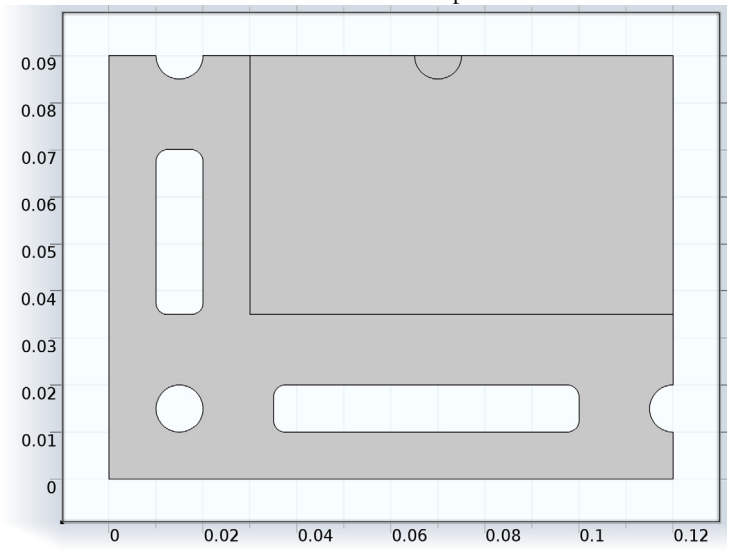

This completes the 2D work-plane geometry.

Extrude 1

1 In the **Model Builder** window, under **Model 1>Geometry 1** right-click **Work Plane 1** and choose **Extrude**.

2 In the **Extrude** settings window, locate the **Distances from Plane** section.

3 In the table, enter the following settings:

DISTANCES (M)
0.005

4 Click the **Build Selected** button.

5 Click the **Zoom Extents** button on the Graphics toolbar.

©2012 COMSOL

Form Union

1 In the **Model Builder** window, under **Model 1>Geometry 1** right-click **Form Union** and choose **Build Selected**.

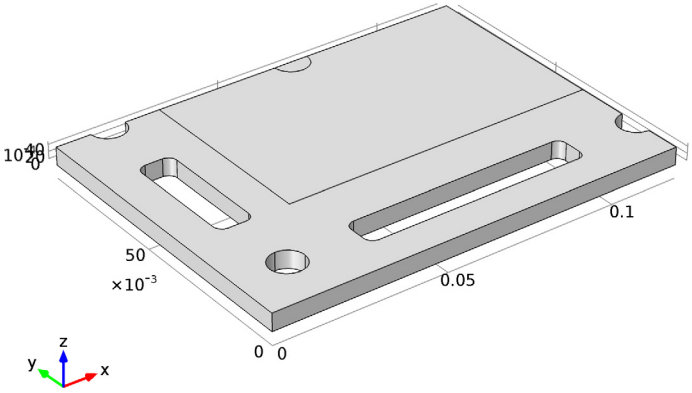

The model geometry is now complete.

MATERIALS

Material 1

1 In the **Model Builder** window, under **Model 1** right-click **Materials** and choose **Material**.

2 Select Domains 1 and 2 only.

3 In the **Material** settings window, locate the **Material Contents** section.

4 In the table, enter the following settings:

PROPERTY	NAME	VALUE
Young's modulus	E	105e9[Pa]
Poisson's ratio	nu	0.33
Density	rho	4940[kg/m^3]
Thermal expansion coefficient	alpha	7.06e-6[1/K]
Thermal conductivity	k	7.5[W/(m*K)]
Heat capacity at constant pressure	Cp	710[J/(kg*K)]

Material 2

1 In the **Model Builder** window, right-click **Materials** and choose **Material**.

2 Select Domain 3 only.

3 In the **Material** settings window, click to collapse the **Material Properties** section.

4 Locate the **Material Contents** section. In the table, enter the following settings:

PROPERTY	NAME	VALUE
Young's modulus	E	`70e9[Pa]`
Poisson's ratio	nu	`0.33`
Density	rho	`2700[kg/m^3]`
Thermal expansion coefficient	alpha	`23e-6[1/K]`
Thermal conductivity	k	`160[W/(m*K)]`
Heat capacity at constant pressure	Cp	`900[J/(kg*K)]`

THERMAL STRESS

Thermal Linear Elastic Material 1

1 In the **Model Builder** window, expand the **Model 1>Thermal Stress** node, then click **Thermal Linear Elastic Material 1**.

2 In the **Thermal Linear Elastic Material** settings window, locate the **Thermal Expansion** section.

3 In the T_{ref} edit field, type `0[degC]`.

Heat Transfer in Solids 1

1 In the **Model Builder** window, right-click **Thermal Stress** and choose the domain setting **Heat Transfer>Heat Transfer in Solids**.

2 Select Domain 3 only.

Heat Source 1

1 In the **Model Builder** window, right-click **Thermal Stress** and choose the domain setting **Heat Transfer>Heat Source**.

2 Select Domain 3 only.

3 In the **Heat Source** settings window, locate the **Heat Source** section.

4 In the Q edit field, type `200/25/(pi*0.005^2*0.01)`.

 ©2012 COMSOL

Roller 1

1 In the **Model Builder** window, right-click **Thermal Stress** and choose the boundary condition **Solid Mechanics>Roller**.

2 Select Boundaries 3, 5, 20, 23, 25, 36, and 42–44 only.

Boundary Load 1

1 In the **Model Builder** window, right-click **Thermal Stress** and choose the boundary condition **Solid Mechanics>Boundary Load**.

2 Select Boundary 24 only.

3 In the **Boundary Load** settings window, locate the **Force** section.

4 Specify the $\mathbf{F}_A$ vector as

0	x
0	y
-P1	z

Boundary Load 2

1 In the **Model Builder** window, right-click **Thermal Stress** and choose the boundary condition **Solid Mechanics>Boundary Load**.

2 Select Boundary 4 only.

3 In the **Boundary Load** settings window, locate the **Force** section.

4 Specify the $\mathbf{F}_A$ vector as

0	x
0	y
-P2	z

Heat Flux 1

1 In the **Model Builder** window, right-click **Thermal Stress** and choose the boundary condition **Heat Transfer>Heat Flux**.

2 Select Boundaries 8–10, 12, 13, 17–19, 26–30, and 37–39 only.

3 In the **Heat Flux** settings window, locate the **Heat Flux** section.

4 Click the **Inward heat flux** button.

5 In the h edit field, type `50`.

6 In the T_{ext} edit field, type `80[degC]`.

Heat Flux 2

1 In the **Model Builder** window, right-click **Thermal Stress** and choose the boundary condition **Heat Transfer>Heat Flux**.

2 Select Boundaries 1 and 2 only.

3 In the **Heat Flux** settings window, locate the **Heat Flux** section.

4 Click the **Inward heat flux** button.

5 In the h edit field, type `5`.

6 In the T_{ext} edit field, type `20[degC]`.

MESH 1

1 In the **Model Builder** window, under **Model 1** click **Mesh 1**.

2 In the **Mesh** settings window, locate the **Mesh Settings** section.

3 From the **Element size** list, choose **Coarse**.

Free Triangular 1

1 Right-click **Model 1>Mesh 1** and choose **Free Triangular**.

2 In the **Free Triangular** settings window, locate the **Boundary Selection** section.

3 From the **Geometric entity level** list, choose **Boundary**.

4 Select Boundaries 4, 24, and 34 only.

Size 1

1 Right-click **Model 1>Mesh 1>Free Triangular 1** and choose **Size**.

2 In the **Size** settings window, locate the **Element Size** section.

3 From the **Predefined** list, choose **Coarse**.

4 Click the **Build All** button.

 ©2012 COMSOL

5 Click the **Zoom Extents** button on the Graphics toolbar.

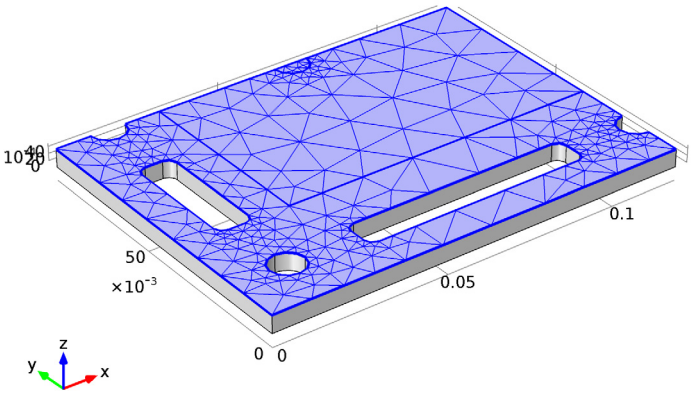

Swept 1

In the **Model Builder** window, right-click **Mesh 1** and choose **Swept**.

Distribution 1

1 In the **Model Builder** window, under **Model 1>Mesh 1** right-click **Swept 1** and choose **Distribution**.

2 In the **Distribution** settings window, locate the **Domain Selection** section.

3 From the **Selection** list, choose **All domains**.

4 Locate the **Distribution** section. In the **Number of elements** edit field, type 2.

5 Click the **Build All** button.

6 Click the **Zoom Extents** button on the Graphics toolbar.

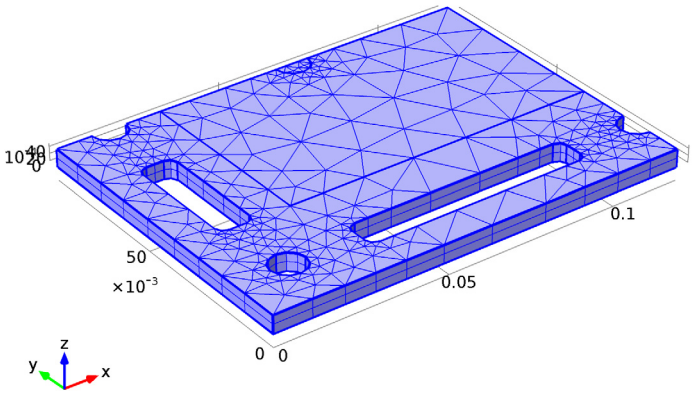

STUDY 1

In the **Model Builder** window, right-click **Study 1** and choose **Compute**.

RESULTS

Stress (ts)

The first default plot shows the von Mises stress. It should look like the lower plot in Figure 12.

The other default plot shows the temperature field which should be similar to that displayed in Figure 11. You can copy this plot and modify it to visualize the displacement field in the deformed plate as shown on the upper plot in Figure 12.

Temperature (ts) 1

1 In the **Model Builder** window, under **Results** right-click **Temperature (ts)** and choose **Duplicate**.

2 Right-click **Temperature (ts) 1** and choose **Properties**.

3 In the **3D Plot Group** settings window, locate the **Node Properties** section.

4 In the **Name** edit field, type `Displacement (ts)`.

 ©2012 COMSOL

Displacement (ts)

1 In the **Model Builder** window, expand the **Results>Displacement (ts)** node, then click **Surface 1**.

2 In the **Surface** settings window, locate the **Coloring and Style** section.

3 From the **Color table** list, choose **Rainbow**.

4 Click **Replace Expression** in the upper-right corner of the **Expression** section. From the menu, choose **Thermal Stress (Solid Mechanics)>Displacement>Total displacement (ts.disp)**.

5 Click the **Plot** button.

©2012 COMSOL