Assembly with a Hinge

Introduction

In mechanical assemblies, parts are sometimes connected so that they are free to move relative to each other in one or more degrees of freedom. Examples of such connections are ball joints, hinges, and different types of bearings. If the details of the connection are not the subjects of the analysis, it is often possible to model the connection using the Rigid Connector feature in COMSOL Multiphysics.

The current example illustrates how to model a barrel hinge connecting two solid objects in an assembly.

Model Definition

Figure 1 shows the model geometry.

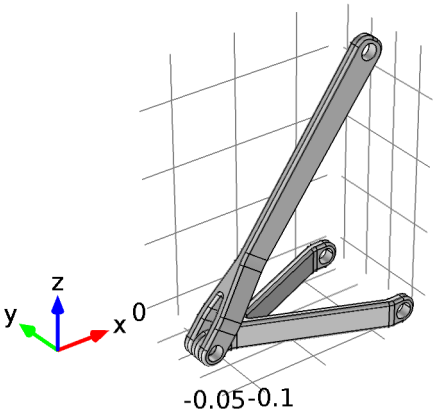

Figure 1: Model geometry.

The two parts of the assembly are connected through a barrel hinge that allows relative rotation only along the axis of the pin hole. All other degrees of freedom are common between the two parts.

The two holes of the forked bottom part are bolted, and can be considered as fully constrained.

The pin hole of the top part is constrained in the x direction so that it can slide in the y-z plane.

A force of 1 kN is applied in z direction at a 10 cm distance in the negative y direction from the center of the upper pin hole. The offset of the load will thus introduce both tension and bending of the member.

Results and Discussion

The default plot shown in Figure 2 shows the von Mises stress in the model. You can see the bending of the top part due to the offset of the load. You can also see the stress that is transmitted around the hinge.

In Figure 3 the color gradient in the x displacement indicates that the lower part of the assembly undergoes bending around y axis. With a constraint rotation in y direction bending from one part would progress to the second part. The upper part however shows a fairly constant displacement through the height, which indicates that is not being bent in y direction and thus it has a free rotation in y direction in the connection point.

 ©2012 COMSOL

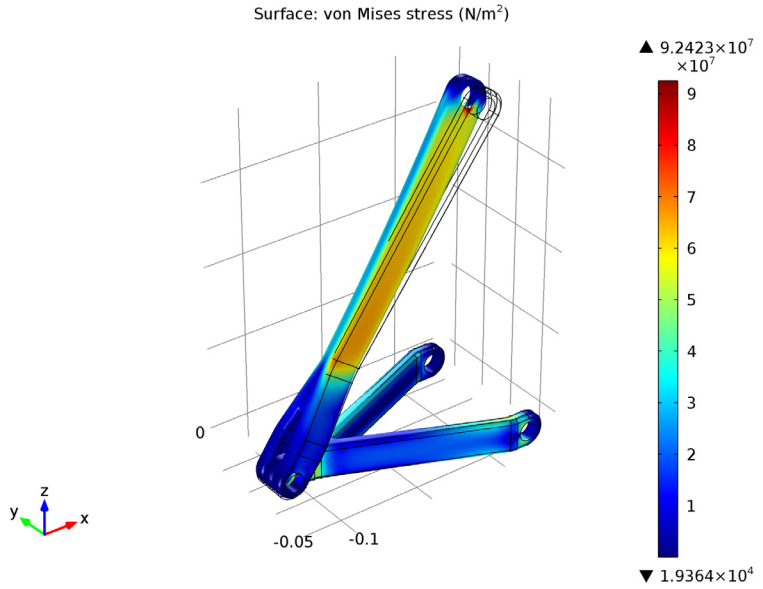

Figure 2: von Mises stress distribution in the hinge assembly.

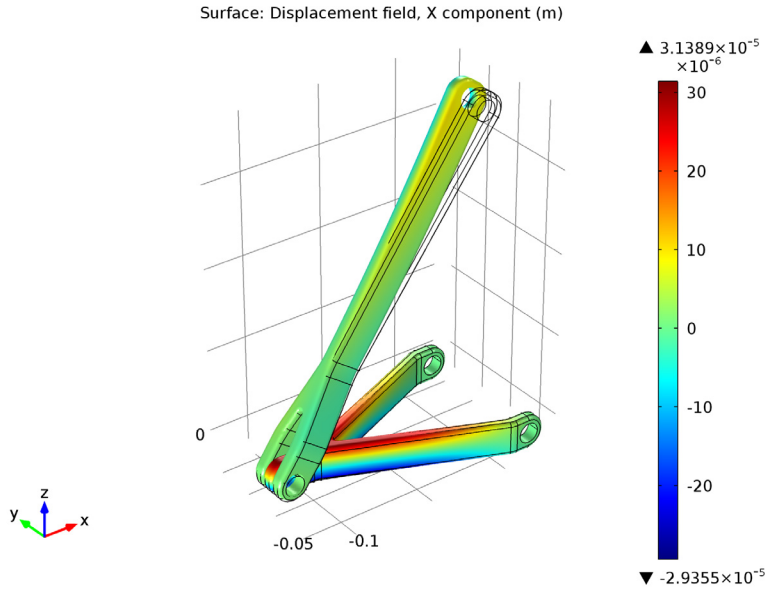

Figure 3: x-displacement.

Notes About the COMSOL Implementation

The approach when modeling mechanisms is to attach rigid connectors to both parts, make sure that they have a common center of rotation, and then couple relevant degrees of freedom between them in order to obtain the desired function.

When you model a hinge, all translations and two rotations should be equal in the two parts. As in this case the displacement and the rotation in the hinge remain small, the procedure simply consists of linking the displacement in all directions as well as the rotation around the x and z directions. You connect the displacements of the rigid connectors directly using the prescribed displacement setting available in the rigid connector feature. In order to constrain the rotation directions independently, you need however to add two global constraints, one for each rotational degree of freedom. The rigid connector uses a quaternion representation of the rotation; see the section Theory for the Rigid Connector in the *Structural Mechanics User's Guide*. In this specific example both the b and the d rotation variables are coupled between the two rigid connectors, because they directly correspond to the intended rotation angles for small rotations.

Another rigid connector is also used for applying the force to the upper pin hole.

Model Library path: `Structural_Mechanics_Module/Connectors_and_Mechanisms/hinge_assembly`

Modeling Instructions

MODEL WIZARD

1. Go to the **Model Wizard** window.
2. Click **Next**.
3. In the **Add physics** tree, select **Structural Mechanics>Solid Mechanics (solid)**.
4. Click **Next**.
5. Find the **Studies** subsection. In the tree, select **Preset Studies>Stationary**.
6. Click **Finish**.

 ©2012 COMSOL

GLOBAL DEFINITIONS

Parameters

1 In the **Model Builder** window, right-click **Global Definitions** and choose **Parameters**.

2 In the **Parameters** settings window, locate the **Parameters** section.

3 In the table, enter the following settings:

Name	Expression	Description
F	1e3[N]	Applied load

GEOMETRY 1

Import 1

1 In the **Model Builder** window, under **Model 1** right-click **Geometry 1** and choose **Import**.

2 In the **Import** settings window, locate the **Import** section.

3 Click the **Browse** button.

4 Browse to the model's Model Library folder and double-click the file `hinge_assembly.mphbin`.

5 Click the **Import** button.

Form Union

1 In the **Model Builder** window, under **Model 1>Geometry 1** click **Form Union**.

2 In the **Finalize** settings window, locate the **Finalize** section.

3 From the **Finalization method** list, choose **Form an assembly**.

4 Clear the **Create pairs** check box.

5 Click the **Build Selected** button.

MATERIALS

Material Browser

1 In the **Model Builder** window, under **Model 1** right-click **Materials** and choose **Open Material Browser**.

2 In the **Material Browser** window, locate the **Materials** section.

3 In the tree, select **Built-In>Structural steel**.

4 Right-click and choose **Add Material to Model** from the menu.

SOLID MECHANICS

Fixed Constraint 1

1 In the **Model Builder** window, under **Model 1** right-click **Solid Mechanics** and choose **Fixed Constraint**.

2 Select Boundaries 133–136 only.

Rigid Connector 1

1 In the **Model Builder** window, right-click **Solid Mechanics** and choose **Rigid Connector**.

2 Select Boundaries 67 and 68 only.

3 In the **Rigid Connector** settings window, locate the **Prescribed Displacement at Center of Rotation** section.

4 Select the **Prescribed in X direction** check box.

Applied Force 1

1 Right-click **Model 1>Solid Mechanics>Rigid Connector 1** and choose **Applied Force**.

2 In the **Applied Force** settings window, locate the **Location** section.

3 From the list, choose **User defined**.

4 In the X_p table, enter the following settings:

solid.xcX_rig1	x
solid.xcY_rig1-0.1	y
solid.xcZ_rig1	z

The center of rotation for a rigid connector is available in the variables `xcX_<tag>, xcY_<tag>, and xcZ_<tag>`. The default position is the center of gravity of the attached boundaries, which in this case will be the center of the hole.

5 In the **F** table, enter the following settings:

0	X
0	Y
F	Z

Rigid Connector 2

1 In the **Model Builder** window, right-click **Solid Mechanics** and choose **Rigid Connector**.

2 Select Boundaries 75 and 76 only.

 ©2012 COMSOL

Rigid Connector 3

1 Right-click **Solid Mechanics** and choose **Rigid Connector**.

2 Select Boundaries 16–19 only.

Set the translations of this rigid connector equal to the translations of the second rigid connector.

3 In the **Rigid Connector** settings window, locate the **Prescribed Displacement at Center of Rotation** section.

4 Select the **Prescribed in X direction** check box.

5 In the u_0 edit field, type `solid.u_rig2`.

6 Select the **Prescribed in Y direction** check box.

7 In the v_0 edit field, type `solid.v_rig2`.

8 Select the **Prescribed in Z direction** check box.

9 In the w_0 edit field, type `solid.w_rig2`.

Connect the rotations around the x and z directions, using the quaternion degrees of freedom 'b' and 'd'.

10 In the **Model Builder** window's toolbar, click the **Show** button and select **Advanced Physics Options** in the menu.

Global Constraint 1

1 Right-click **Solid Mechanics** and choose **Global>Global Constraint**.

2 In the **Global Constraint** settings window, locate the **Global Constraint** section.

3 In the **Constraint expression** edit field, type `mod1.solid.b_rig2-mod1.solid.b_rig3`.

Global Constraint 2

1 Right-click **Solid Mechanics** and choose **Global>Global Constraint**.

2 In the **Global Constraint** settings window, locate the **Global Constraint** section.

3 In the **Constraint expression** edit field, type `mod1.solid.d_rig2-mod1.solid.d_rig3`.

MESH 1

Free Tetrahedral 1

In the **Model Builder** window, under **Model 1** right-click **Mesh 1** and choose **Free Tetrahedral**.

Size 1

1 In the **Model Builder** window, under **Model 1>Mesh 1** right-click **Free Tetrahedral 1** and choose **Size**.

2 In the **Size** settings window, locate the **Geometric Entity Selection** section.

3 From the **Geometric entity level** list, choose **Boundary**.

4 Select Boundaries 41, 42, and 53 only.

5 Locate the **Element Size** section. Click the **Custom** button.

6 Locate the **Element Size Parameters** section. Select the **Maximum element size** check box.

7 In the associated edit field, type `0.002`.

Size

1 In the **Model Builder** window, under **Model 1>Mesh 1** click **Size**.

2 In the **Size** settings window, locate the **Element Size** section.

3 From the **Predefined** list, choose **Fine**.

4 Click the **Build All** button.

STUDY 1

In the **Model Builder** window, right-click **Study 1** and choose **Compute**.

RESULTS

Stress (solid)

The default plot shows the von Mises stress distribution on the surface of the assembly. Compare with Figure 2.

Finally, reproduce the x-displacement plot shown in Figure 3 with the following steps.

Stress (solid) 1

1 In the **Model Builder** window, under **Results** right-click **Stress (solid)** and choose **Duplicate**.

2 In the **Model Builder** window, expand the **Results>Stress (solid) 1** node, then click **Surface 1**.

3 In the **Surface** settings window, click **Replace Expression** in the upper-right corner of the **Expression** section. From the menu, choose **Solid Mechanics>Displacement>Displacement field (Material)>Displacement field, X component (u)**.

4 Click the **Plot** button.

 ©2012 COMSOL

5 In the **Model Builder** window, right-click **Stress (solid) 1** and choose **Rename**.

6 Go to the **Rename 3D Plot Group** dialog box and type `x-Displacement` in the **New name** edit field.

7 Click **OK**.

 ©2012 COMSOL